2X533901E

Please order by parts number,not key number
Bitte,Best:-Nr.angeben(Nicht " key " -nr.)
Veuillez indiquer le numero de la piece(Non " key " no.)

WARRANTY QUALITY

SALTWATER REEL TICATEAM SB30M / SB30MG

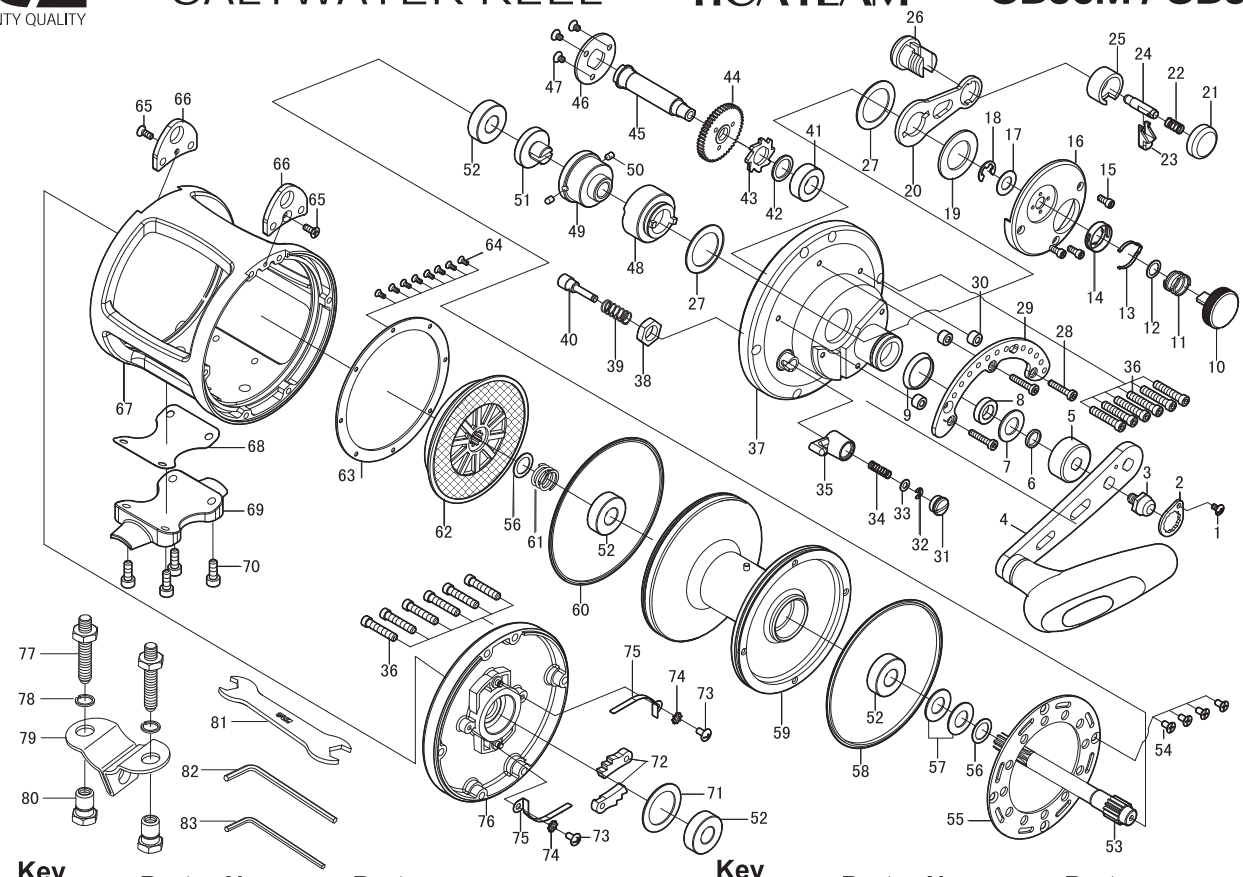

Key NO.	Parts No.	Parts name	Key NO.	Parts No	Parts name
1	2E2-006-01	B26M-050 SCREW	46	2F6-039-01	COUPLING PLATE
2	2F6-043-01	ROTOR NUT HOLDING PLATE	47	2E2-058-01	F30M-045 SCREW
3	2E3-053-01	HANDLENUT	48	2A2-051-01	DRAG CAM
4	2YH-225-01	HANDLE TOTAL ASSEMBLY	49	2F8-046-01	BEARING HOLDER
5	2F5-062-01	DRIVE GEAR SHAFT COVER	50	2P1-018-01	DRAG CAM PIN
6	2C1-075-01	COLLAR	51	2E0-048-01	PRESET SCREW
7	2W1-154-01	101-180 WASHER	52	2Z1-033-05	14308 BALL BEARING
8	2Z1-023-05	814-4 BALL BEARING	53	2G2-115-01	PINION GEAR
9	2E9-006-01	O RING	54	2E2-056-01	F30M-060 SCREW
10	2D1-031-01	PRESET DRAG KNOB	55	2F3-043-01	CLICK PLATE
11	2Q1-089-01	COMPRESSION SPRING	56	2W1-095-01	097-140 WASHER
12	2W1-182-01	071-100 WASHER	57	2L1-011-02	SPRING WASHER
13	2L3-035-01	CLICK LEAF SPRING	58	2E9-034-01	WATER PROOF RING
14	2F8-085-01	CLICK LEAF SPRING HOLDER	59	2YS-246-01	SPOOL ASSEMBLY
15	2E2-078-01	h30M-070 SCREW	60	2E9-013-01	WATER PROOF RING
16	2F5-322-01	FIGHTING LEVER COVER	61	2Q1-059-01	DRAG SPRING
17	2W1-077-01	075-140 WASHER	62	2YD-041-01	BRAKE DISC ASSY(L)
18	2E5-018-01	E6.0 RETAINER	63	2F5-132-01	BRAKE DISC COVER
19	2W1-155-01	170-280 WASHER	64	2E2-030-02	F20M-050 SCREW
20	2D4-009-01	FIGHTING LEVER	65	2E2-011-02	F30M-080 SCREW
21	2F5-120-01	BUTTON CAP	66	2F6-046-01	HARNESS LUG (R)
22	2Q1-028-01	BUSH BUTTON SPRING	67	2B1-130-01	BODY
23	2S3-014-01	PUSH BUTTON	68	2W5-027-01	STAND GASKET
24	2YP-001-01	CLICK PIN ASSEMBLY	69	2F8-045-01	REEL FOOT
25	2C1-074-01	SPACER	70	2E2-062-01	H40M-110 SCREW
26	2F8-076-01	CLICK HOLD	71	2W1-200-01	160-220 WASHER
27	2W1-096-01	197-280 WASHER	72	2A4-050-02	ANTI-REVERSE PAWL
28	2E2-077-01	h30M-160 SCREW	73	2E2-004-01	B30M-060 SCREW
29	2F5-134-01	DRAG LEVER QUADRANT	74	2E8-004-01	STARWASHER
30	2C1-093-01	QUADRANT SPACER	75	2L5-007-01	PAWL SPRING
31	2F5-335-01	CLICK SWITCH COVER	76	2YF-126-01	LEFT SIDE COVER ASSEMBLY
32	2E5-006-01	E2.5 RETAINER	77	2E0-022-01	CLAMP SCREW
33	2W1-204-01	034-065 WASHER	78	2E4-027-01	RETAINER
34	2Q1-102-01	CLICK PLUNGER SPRING	79	2F6-125-01	ROD CLAMP
35	2F7-009-01	CLICK SWITCH	80	2E3-030-01	ROD CLAMP NUT
36	2E2-082-01	H40M-160 SCREW	81	2X3-006-01	WRENCH
37	2YF-129-01	RIGHT SIDE COVER ASSEMBLY	82	2X3-007-01	HEX WRENCH
38	2E3-064-01	CLICK BUSHING NUT	83	2X3-009-01	HEX WRENCH
39	2Q1-063-01	CLICK BUTTON SPRING	SB30MG	SPECIAL PARTS	
40	2P1-062-01	CLICK PLUNGER	2	2F6-043-02	ROTOR NUT HOLDING PLATE
41	2Z1-034-05	1019-7 BALL BEARING	4	2YH-225-02	HANDLE TOTAL ASSEMBLY
42	2W1-152-01	111-146 WASHER	37	2YF-129-02	RIGHT SIDE COVER ASSEMBLY
43	2A3-022-01	RATCHET	67	2B1-130-02	BODY
44	2G1-104-01	DRIVE GEAR	76	2YF-126-02	LEFT SIDE COVER ASSEMBLY
45	2M3-035-02	GEAR SHAFT			